CTG31 投光灯

CTG31 Spot Light

4

应用场所 Application

- 适用于船舶、海洋平台、港口、码头等作露天场所搜索照明。
- Applicable for illumination in open spaces like ships, offshore platforms, ports, and wharfs, etc.

型号含义 Catalogue Number Logic

CTG31 – □ □

- 光源功率 Light source power
- 光源类型 Type of Light source
  - N: 高压钠灯 High pressure sodium lamp
  - L: 金卤灯 Metal halide lamp
  - C: 卤钨灯 Tungsten halogen lamp
- 船用投光灯(泛光灯) Marine spot light(flood light)

外形尺寸 Outline Dimension

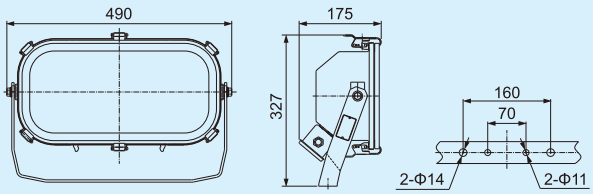

产品特性 Features

- 灯体可水平旋转360°，俯仰±60°，使用方便；
- 壳体拉抻成型、透明钢化玻璃，抗冲击性能好；镜面铝质反光镜，反射效率高。
- The lamp body can rotate 360°, and tilt 60°; easy to use;
- Enclosure is stretching formed, with toughened glass transparent cover, and of good impact resistant performance; aluminium reflector, with high reflection efficiency.

采用标准 Compliance

- GB11472 GB7000.7

温度范围 Temperature range

- –25℃~+55℃

电缆外径 Cable outer diameter

- 适合 ϕ10~ϕ14mm电缆连接
  Suitable for cable of ϕ10~ϕ14mm

选配表 Selection table

型 号 Model	功 率(W) Power	电压(V) Voltage	光源 Light source	光通量 lm Luminous flux	防护等级 Protection degree	灯座 Lamp holder	材质 Material	重量(kg) Weight
CTG31-N250	250	110 / 220	高压钠灯 High pressure sodium lamp	28000	IP56	E40	不锈钢 Stainless steel	7.5
CTG31-N400	400			48000				7.5
CTG31-L250	250		金卤灯 Metal halide lamp	20500				7.5
CTG31-L400	400			36000				7.5
CTG31-C500	500		卤钨灯 Tungsten halogen lamp	10000		R7S		7.2
CTG31-C1000	1000			20000				7.2

CTG32 投光灯
CTG32 Spot Light

应用场所 Application

- 适用于船舶、海洋平台、港口、码头等作露天场所搜索照明。
- Applicable for illumination in open spaces like ships, offshore platforms, ports, and wharfs, etc.

型号含义 Catalogue Number Logic

CTG32 – □ □

- 光源功率 Light source power
- 光源类型 Type of Light source
  - N: 高压钠灯 High pressure sodium lamp
  - L: 金卤灯 Metal halide lamp
- 船用投光灯(泛光灯) Marine spot light(flood light)

外形尺寸 Outline Dimension

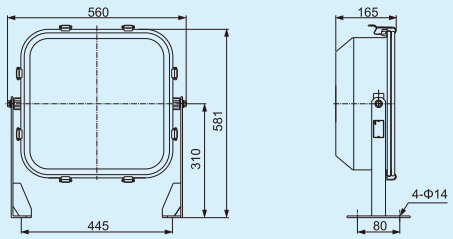

产品特性 Features

- 内装双光源，为泛光型；
- 不锈钢壳体拉抻成型、透明钢化玻璃，防腐等级WF2。
- Built-in dual-light source, floodlight type;
- Stainless steel enclosure, stretching formed, with toughened glass transparent cover, corrosion-proof: WF2.

采用标准 Compliance

- GB11472 GB7000.7

温度范围 Temperature range

- –25℃~+55℃

电缆外径 Cable outer diameter

- 适合 ϕ10~ϕ14mm电缆连接
  Suitable for cable of ϕ10~ϕ14mm

选配表 Selection table

型 号 Model	功 率(W) Power	电压(V) Voltage	光源 Light source	光通量 lm Luminous flux	防护等级 Protection degree	灯座 Lamp holder	材质 Material	重量(kg) Weight
CTG32-N400	400×2	110 / 220	高压钠灯 High pressure sodium lamp	48000×2	IP56	E40	不锈钢 Stainless steel	15.5
CTG32-L400			金卤灯 Metal halide lamp	38000×2				16.5

CTG33 投光灯

CTG33 Spot Light

应用场所 Application

- 适用于船舶、海洋平台、港口、码头等作露天场所搜索照明。
- Applicable for illumination in open spaces like ships, offshore platforms, ports, and wharfs, etc.

型号含义 Catalogue Number Logic

CTG33 – □ □

- 光源功率 Light source power
- 光源类型 Type of Light source
  - N: 高压钠灯 High pressure sodium lamp
  - L: 金卤灯 Metal halide lamp
- 船用投光灯(泛光灯) Marine spot light(flood light)

外形尺寸 Outline Dimension

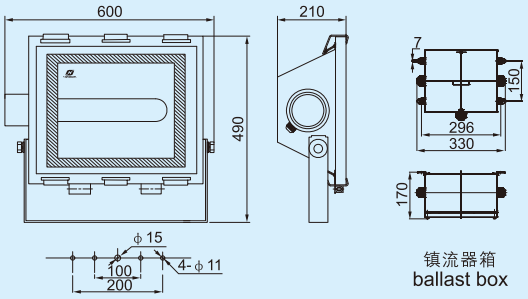

产品特性 Features

- 不锈钢外壳，具有较强的防腐能力；
- 抗高能量冲击的钢化玻璃；
- 采用搭扣方式紧固，便于检修
- 灯具在仰角45° ~90° 可调。
- Stainless steel enclosure; with strong corrosion–proof performance;
- Toughened glass, resistant to high energy impact;
- Fixed by hasp type; easy for overhauling;
- Elevation angle can be adjusted within 45° ~90°

温度范围 Temperature range

- –25℃~+55℃

选配表 Selection table

型 号 Model	功 率(W) Power	电压(V) Voltage	光通量 lm Luminous flux	防护等级 Protection degree	灯座 Lamp holder	材质 Material	电缆外径(mm) Cable O.D.	重量(kg) Weight
CTG33-N1000	1000	110 / 220	130000	IP56	E40	不锈钢 Stainless steel	Φ10-Φ14	10.5
CTG33-L1000	1000		50000					

TG7 投光灯

TG7 Spot Light

应用场所 Application

- 适用于船舶、海洋平台、港口、码头等作露天场所搜索照明。
- Applicable for illumination in open spaces like ships, offshore platforms, ports, and wharfs, etc.

型号含义 Catalogue Number Logic

TG7 – □ □

- 光源功率 Light source power
- 光源类型 Type of Light source
  - G: 高压汞灯 High pressure mercury lamp
  - N: 高压钠灯 High pressure sodium lamp
  - L: 金卤灯 Metal halide lamp
- 船用投光灯(泛光灯) Marine spot light(flood light)

外形尺寸 Outline Dimension

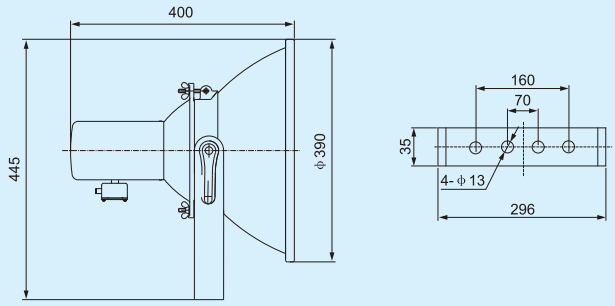

产品特性 Features

- 壳体拉伸成型，镜面铝质反光镜，反射效率高；
- 灯可水平旋转360°，仰俯±30°。
- Enclosure is stretching formed, aluminium reflector, with high reflection efficiency.
- The lamp body can horizontally rotate 360°, and tilt 30°

采用标准 Compliance

- GB11472 GB7000.7
- GB11472-General technical requirements of spotlights, GB7000.7 -Safety requirements of spotlight.

温度范围 Temperature range

- –25℃~+55℃

选配表 Selection table

型 号 Model	功 率(W) Power	电压(V) Voltage	光通量 lm Luminous flux	防护等级 Protection degree	灯座 Lamp holder	材质 Material	电缆外径(mm) Cable O.D.	重量(kg) Weight
TG7-G450	450	110 / 220	11000	IP56	E40	钢 Steel	Φ10-Φ14	7.5
TG7-N400	400		48000					
TG7-L400			3600					